Strength of Materials
Tutorial Series 4 : Shear Stress

Exercise 1

The shear stress in a metallic body is equal to 1050 kgf/cm^2. If the shear modulus is 8400 kN/cm^2, calculate the resulting shear strain.

Exercise 2

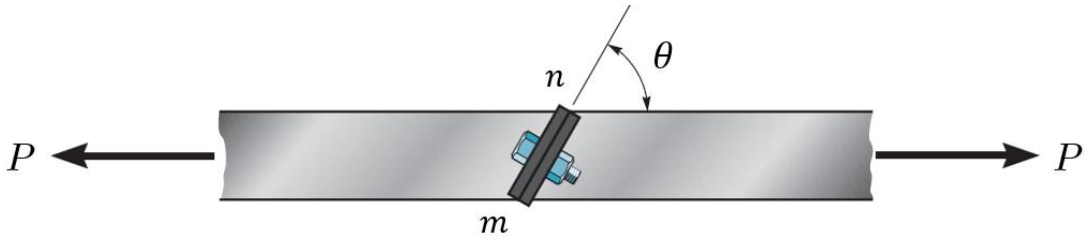

Figure 1

Two plates are held together using two bolts, one on each lateral side of the assembly (Figure 1). The contact interface mn is oriented at an angle θ relative to the horizontal. The plates have a thickness of 35 mm and the bolts have a diameter of 8 mm.

Determine the largest admissible load P if the inclination angle is 50° and the allowable normal and shear stresses are 100 MPa and 70 MPa for the bolts, respectively.

Exercise 3

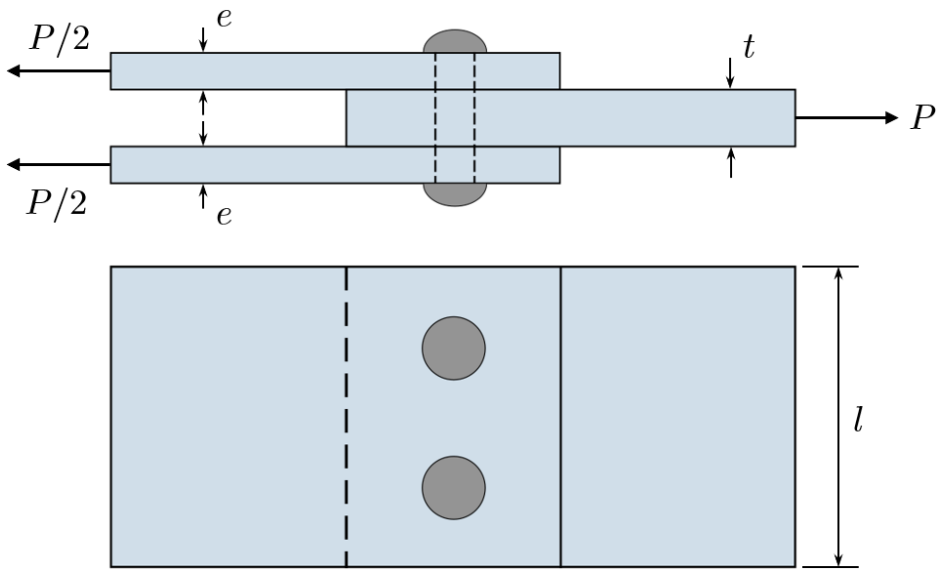

Figure 2

Figure 2 above shows three steel plates that are assembled together using two rivets, each with a diameter of 15 mm.

1. Determine the maximum admissible value of the load P, given that the allowable shear stress for the rivets is 85 MPa.
2. If $P = 40\ kN$, determine the minimum thickness of each of the two plates.

   Account for the largest average tensile stress in the plates and use the following numerical data : $\sigma_w = 120$ MPa and $l = 50\ mm$.

Exercise 4

Figure 3 depicts a pulley with a diameter of 170 mm that is connected to a shaft with a diameter of 48 mm by means of a key to prevent relative rotation. A torque $T = 1.8\ kN \cdot m$ is applied to the shaft.

Determine the minimum width of the key if the working shear stress is 65 MPa.

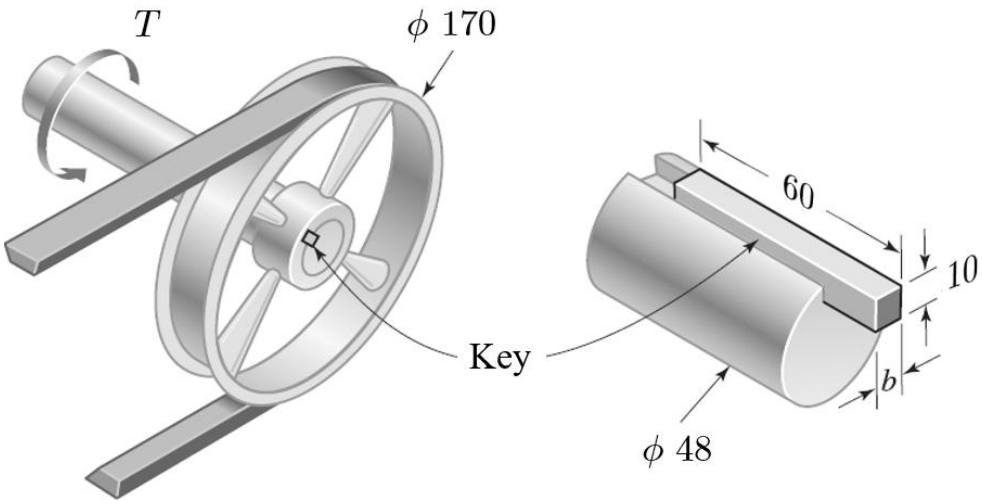

Figure 3